BMM END PORT DIMENSIONS & MOUNTING DATA

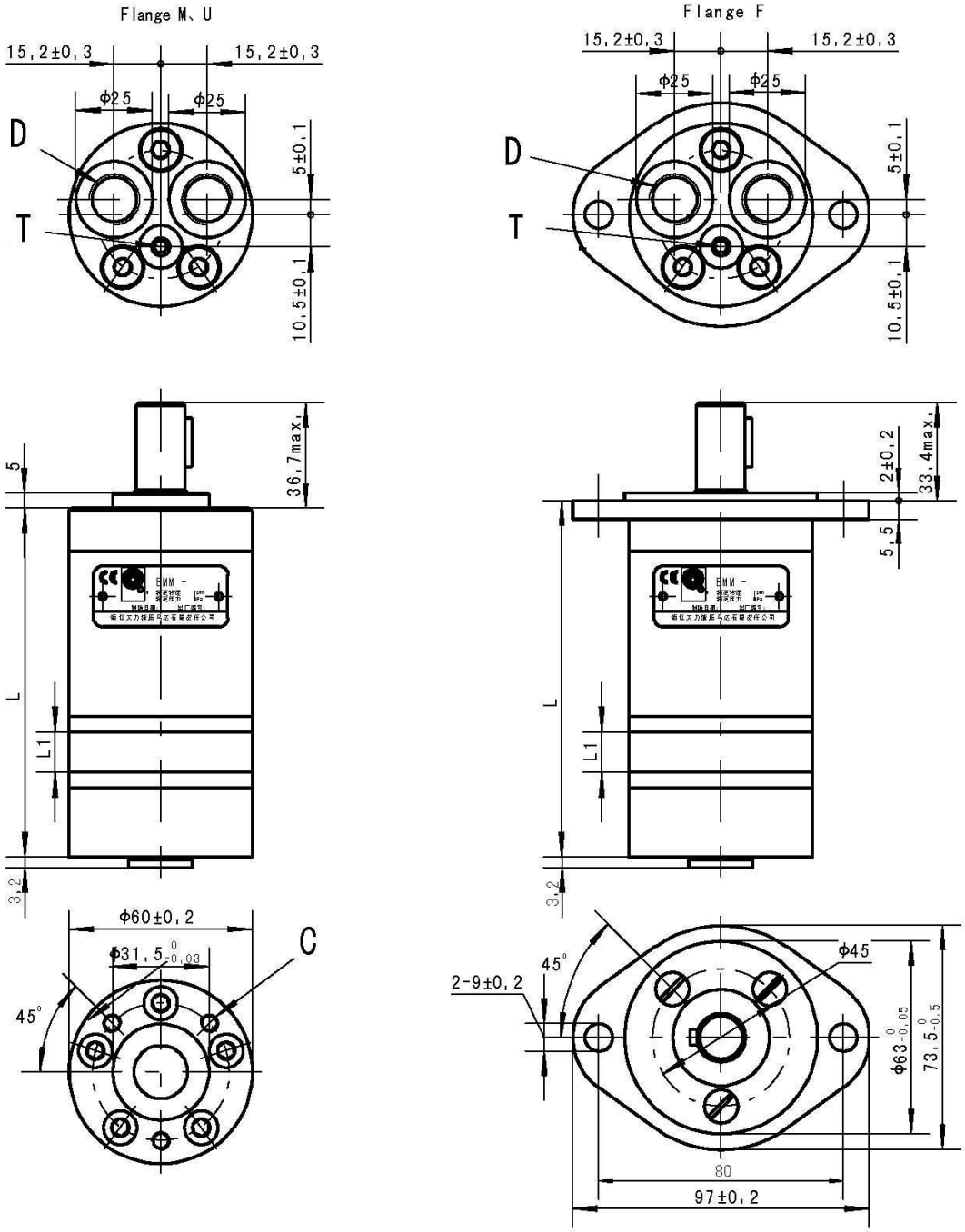

	M, U		F	
MODEL	L	L1	L	L1
BMM8	104	3.5	107	3.5
BMM12.5	106	5.5	109	5.5
BMM20	109	8.5	112	8.5
BMM32	114	13.5	117	13.5
BMM40	118	17	118	17
BMM50	122	21.5	125	21.5

Mounting	M, U				F			
Code	1E	(Depth)	1U	(Depth)	1E	(Depth)	1U	(Depth)
C	M6	(10)	¼-28UNF-2B	(10)	-	-	-	-
D	G3/8	(12)	9/16-18UNF	(12)	G3/8	(12)	9/16-18UNF	(12)
T	G1/8	(8)	3/8-24UNF	(8)	G1/8	(8)	3/8-24UNF	(8)